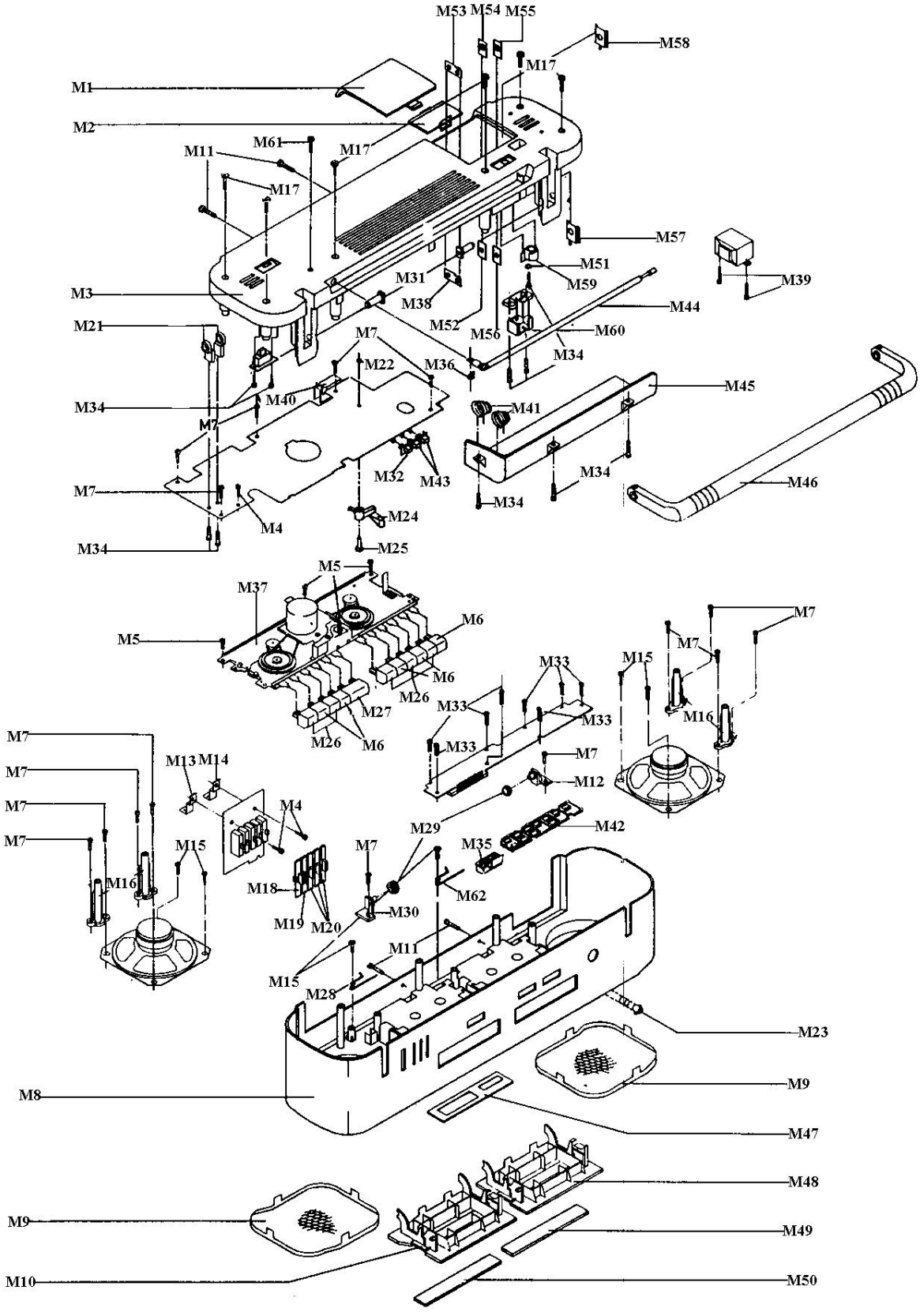SCR-43 AM/FM STEREO DUAL
CASSETTE RECORDER
CABINET (140-0769)
FAXBACK DOC # 11008