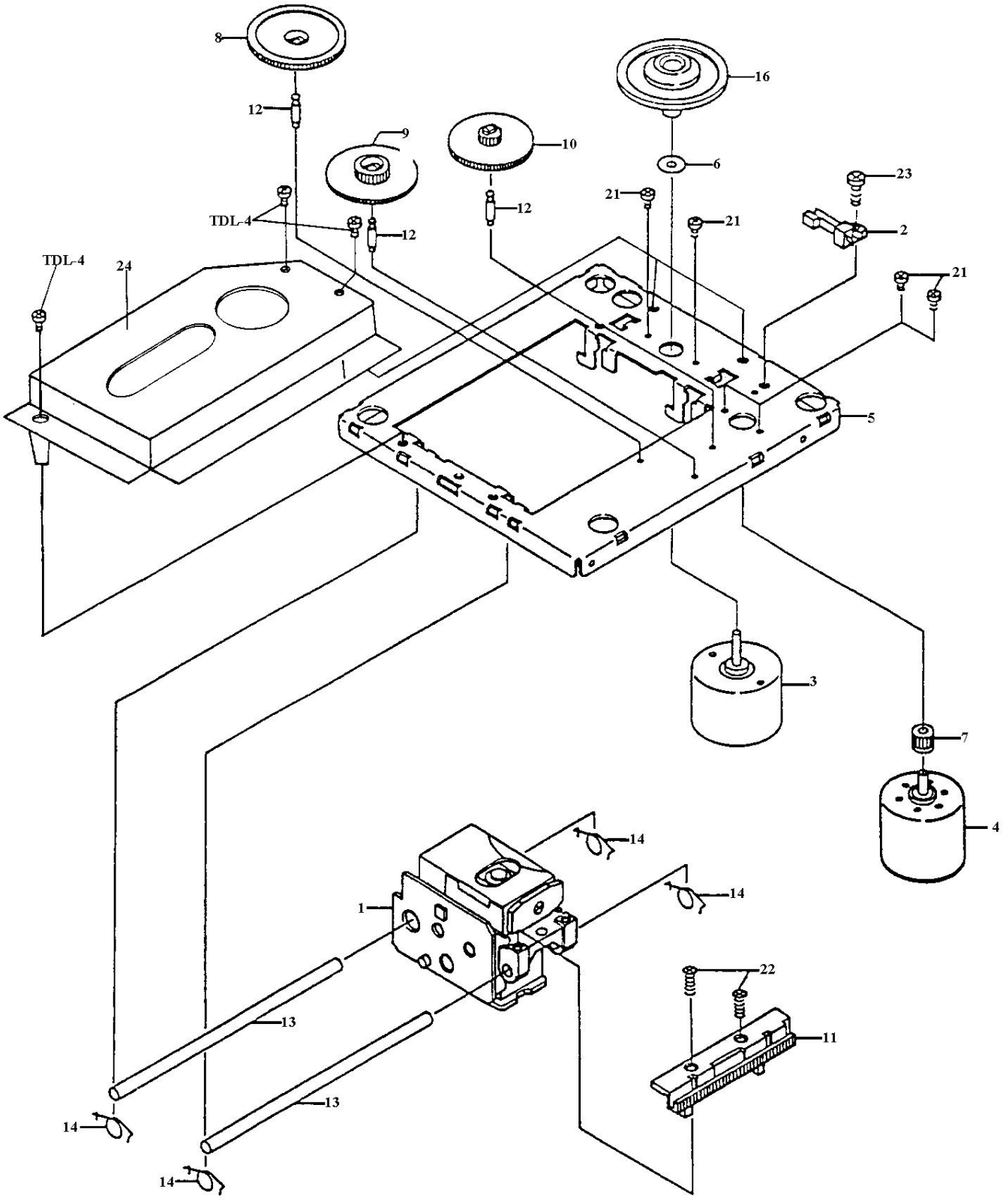MODULAIRE 580 AM/FM
STEREO COMPONENT SYSTEM
CD MECHANISM (130-1252)
FAXBACK DOC # 10969