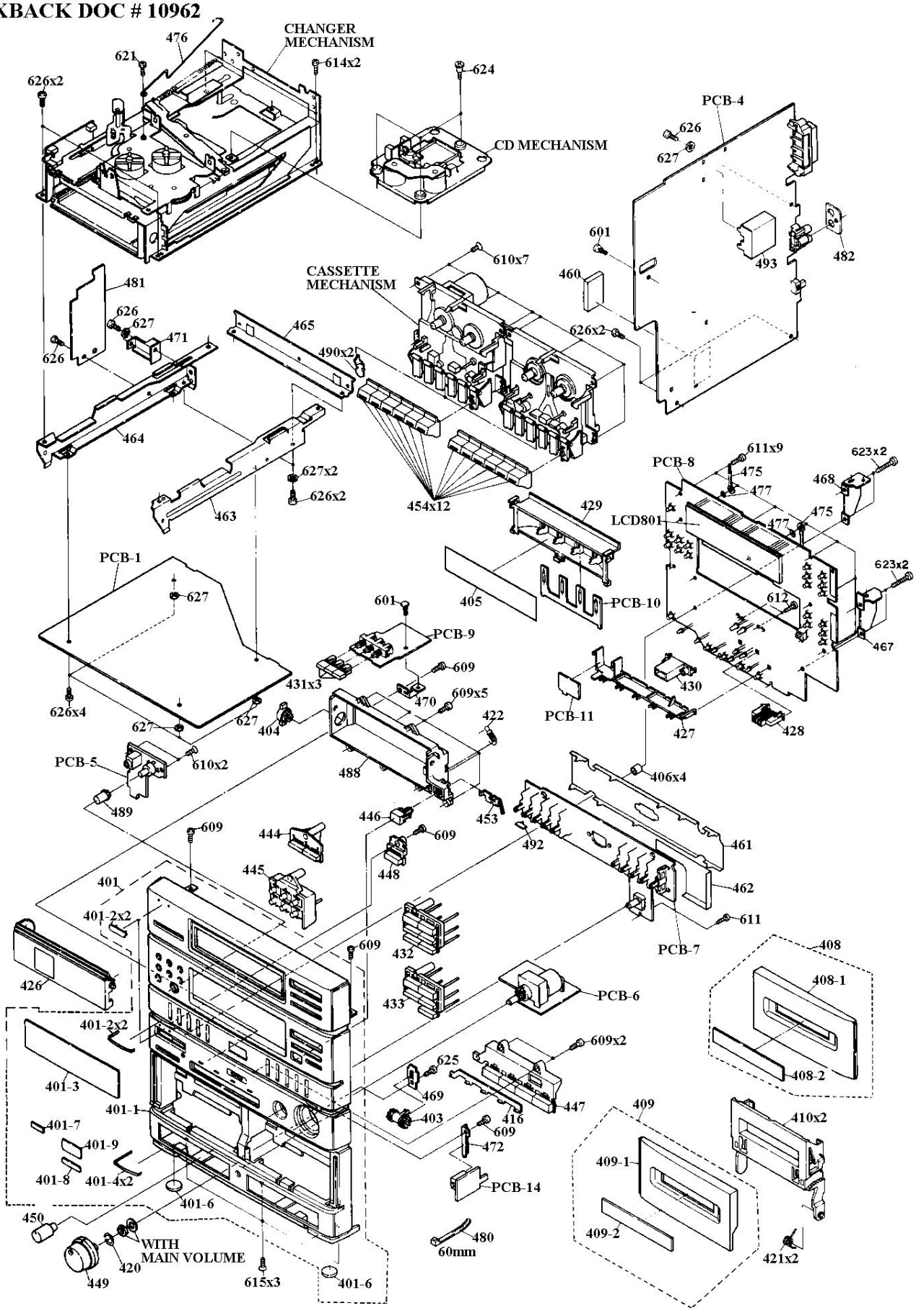SYSTEM 620 COMPACT
DISC STEREO MUSIC SYSTEM
CABINET VIEW 1 (130-1251)
FAXBACK DOC # 10962