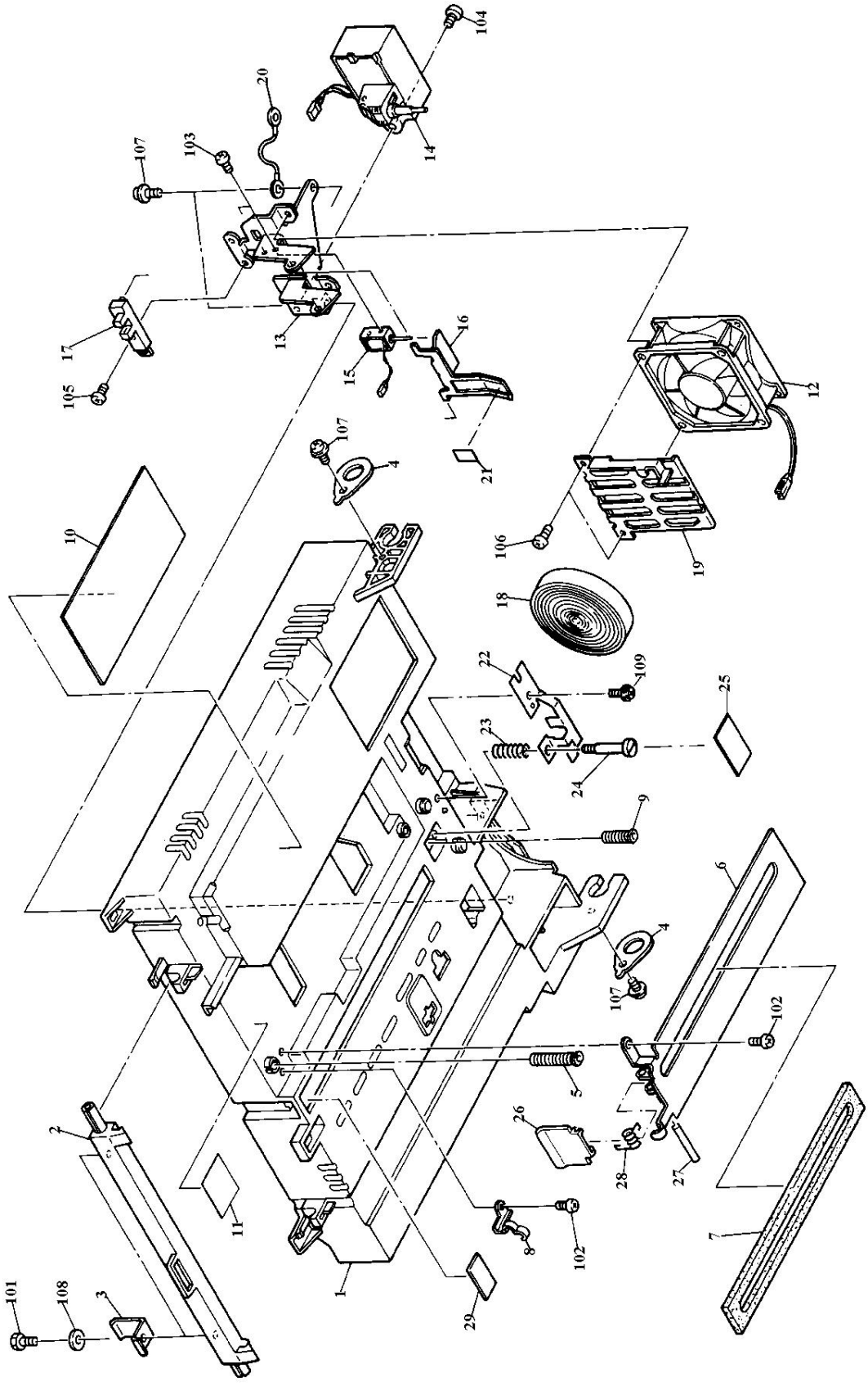LP1000 LASER PRINTER
FRAME SECTION I (260-2804)
FAXBACK DOC # 10607