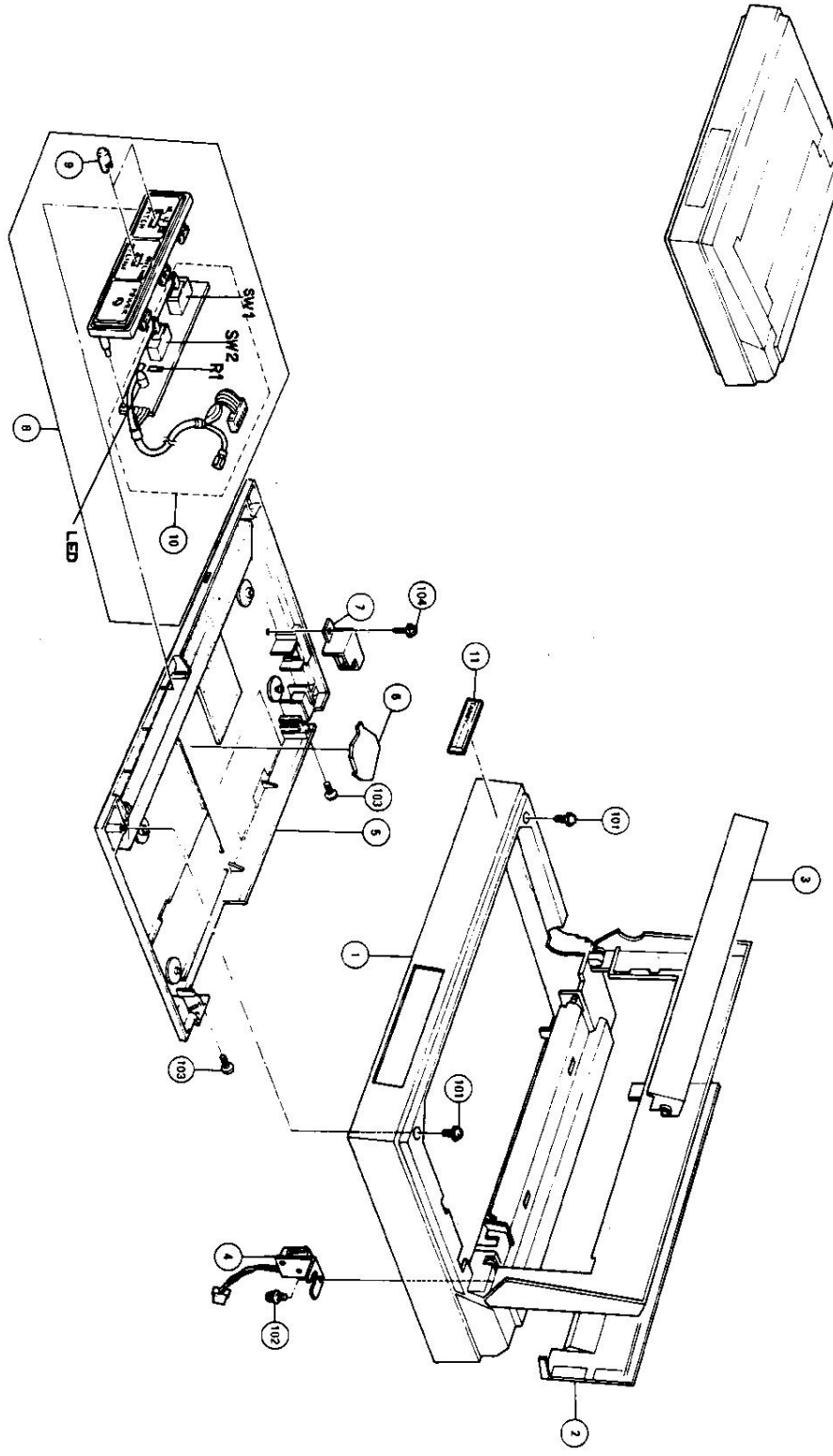DWP-220 DAISY WHEEL
PRINTER COVER ASSY
(260-1278)
FAXBACK DOC # 10501