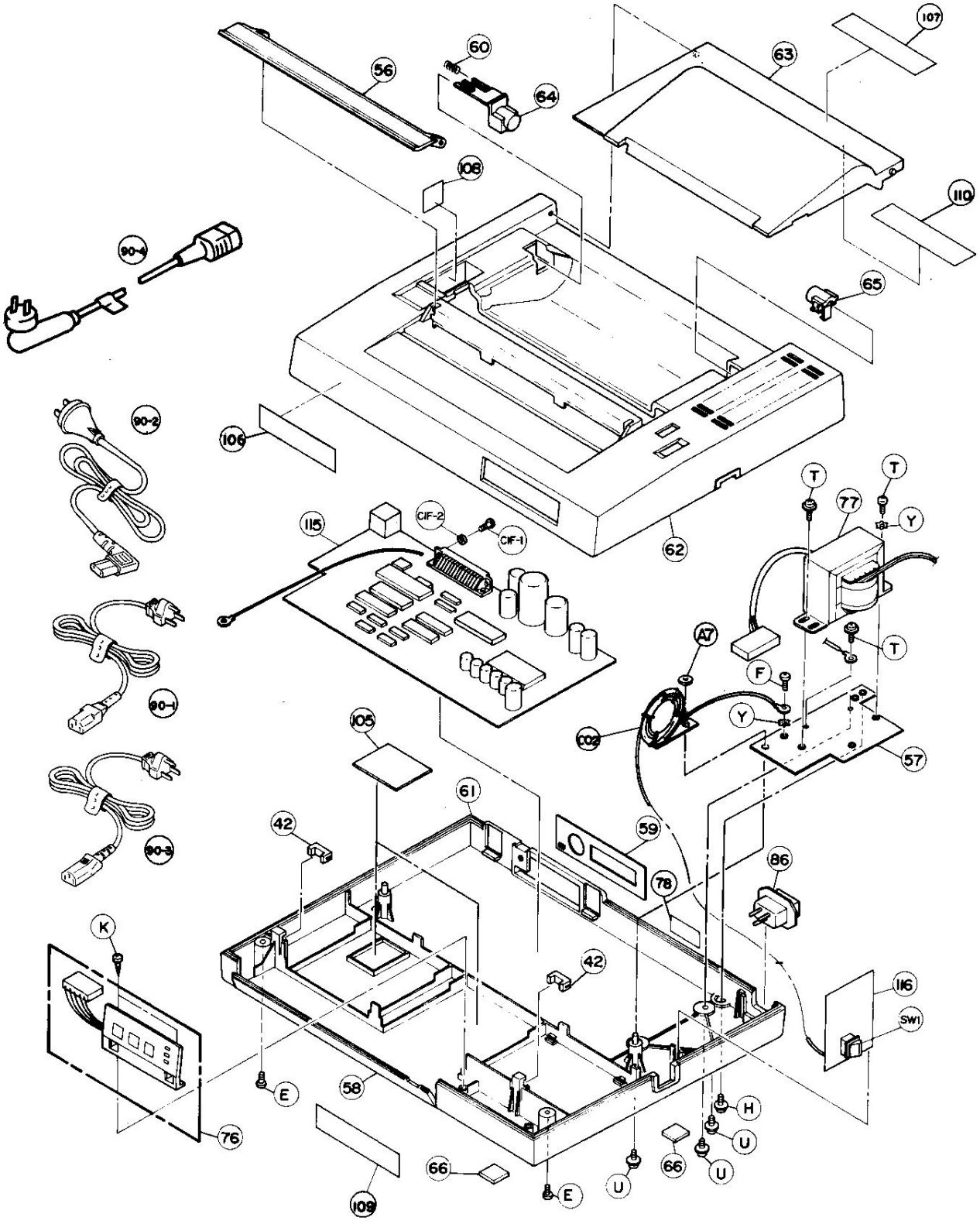CGP-220 COLOR INK-JET PRINTER
PRINTER UNIT (260-1268)
FAXBACK DOC # 10418