DMP-130 DOT-MATRIX PRINTER
SHEET # 1 (260-1280A)
FAXBACK DOC # 10392

CONTINUED ON SHEET # 2

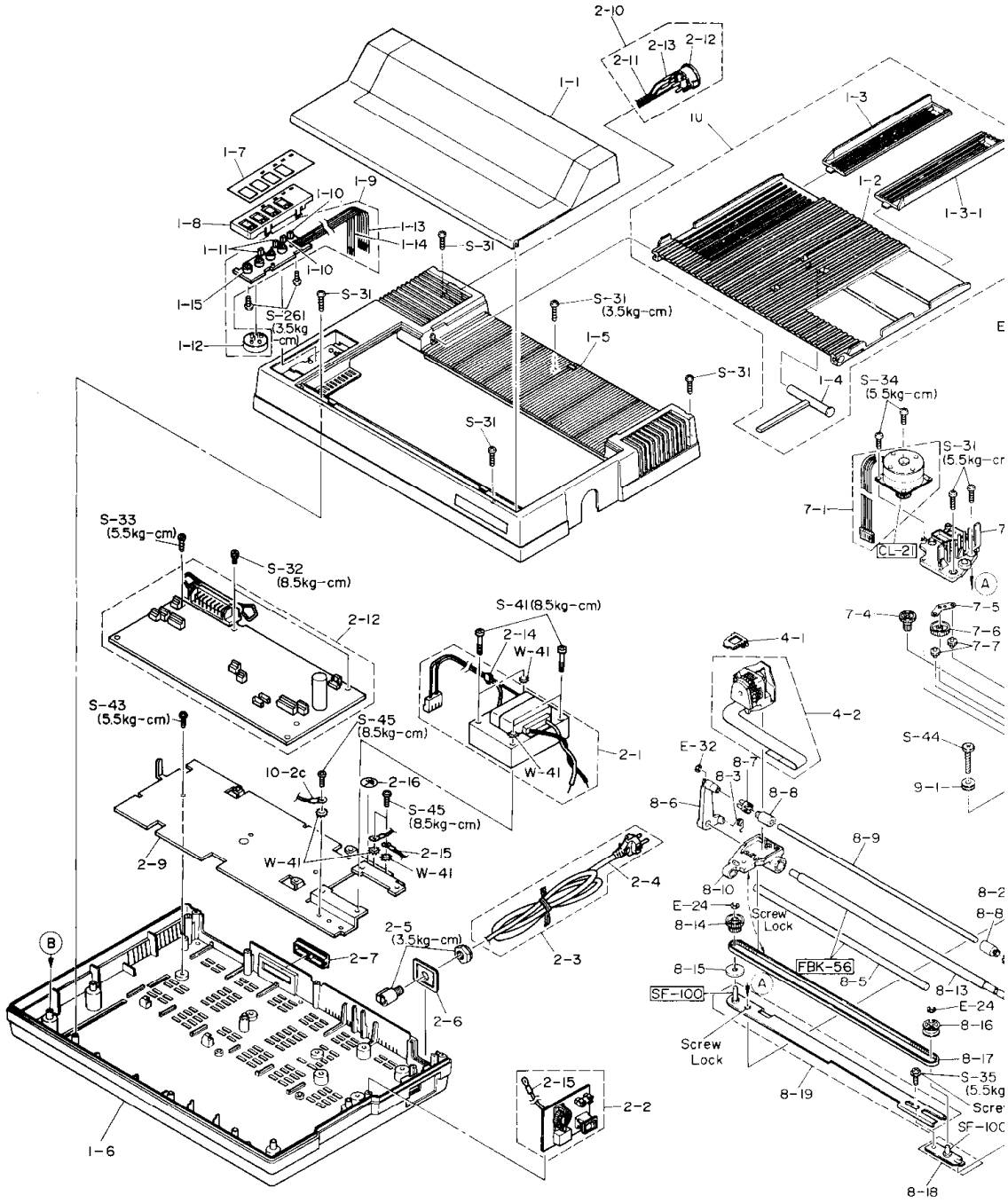
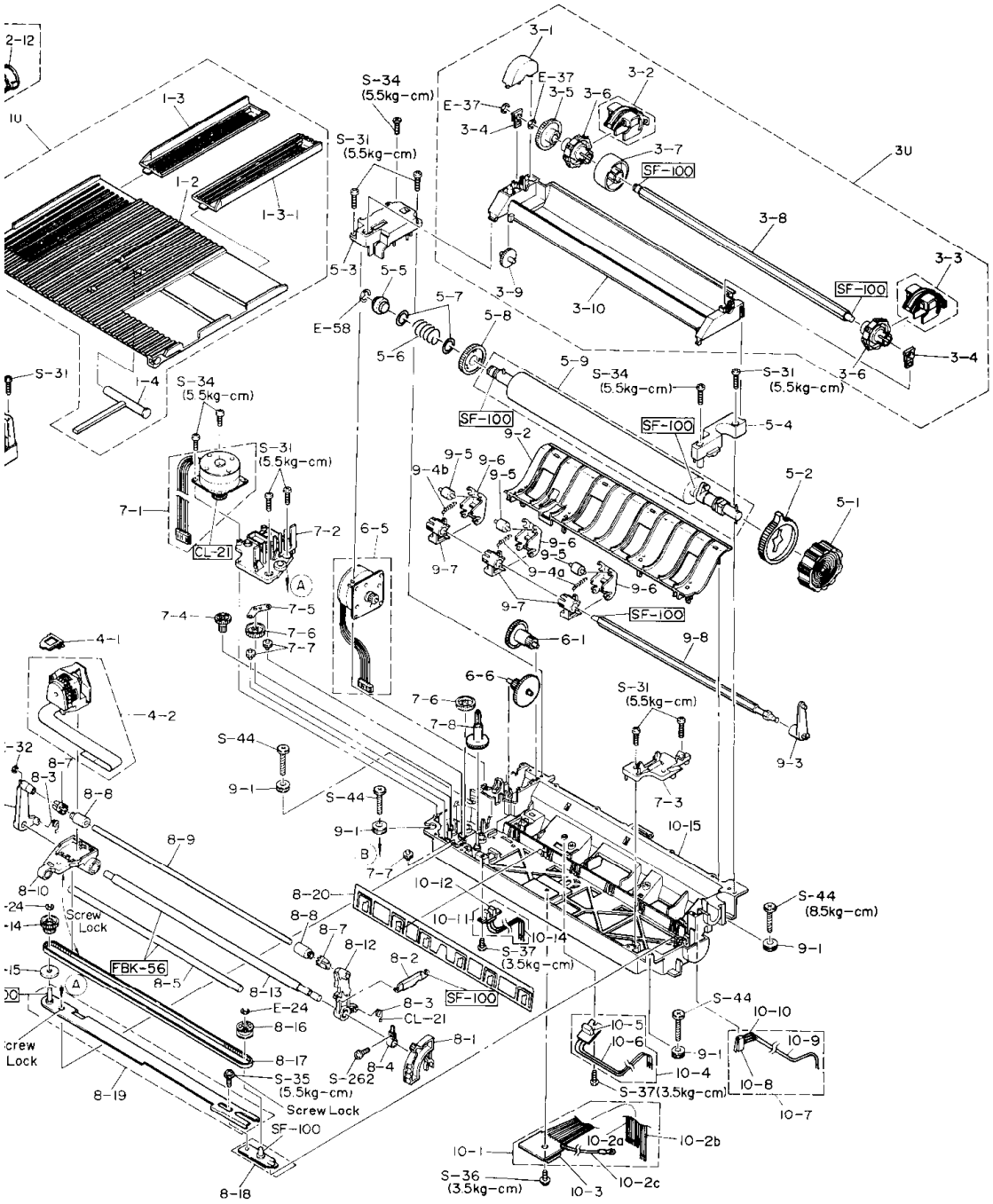
DMP-130 DOT-MATRIX PRINTER
SHEET #2 (260-1280A)
FAXBACK DOC # 10392